Technip KTI

Impianto / Plant	REFURBISHMENT OF KR-601-1/2 - VACUUM HEATERS - AB MAŽEIKIU NAFTA -LITHUANIA
Cliente / Customer	Technip K.T.I. s.p.a. — Ord. N°. / P.O. No. 30.589/A0025 — del / dated 25-05 2007

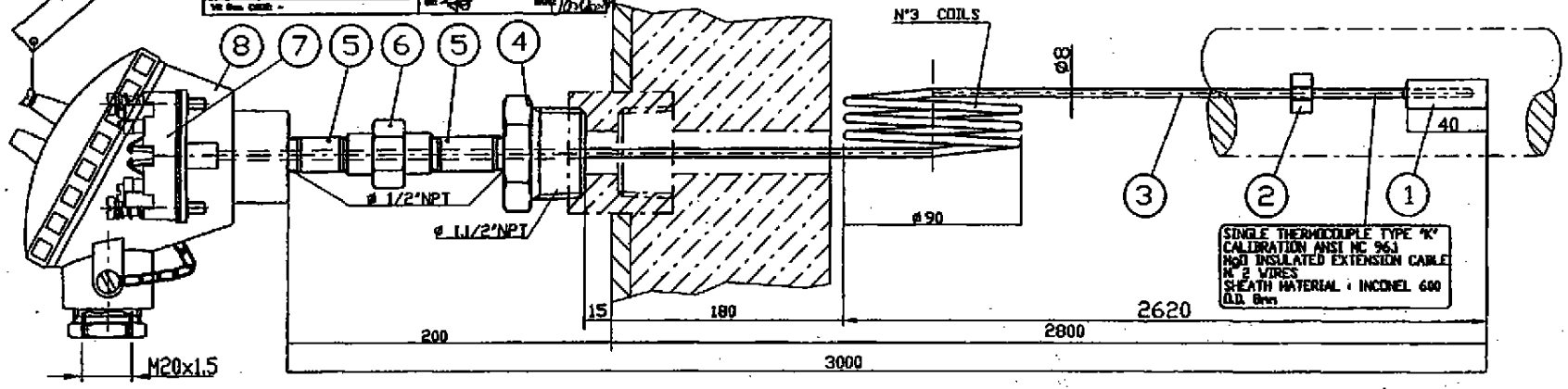

TE-6584.01/02/03/04 TE-6583.01/02/03/04 TE-6559.01/02/03/04 TE-6558.01/02/03/04

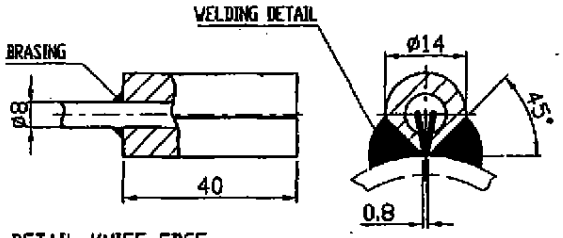

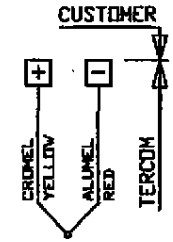

Pos. Item	Q.ta' Q.ty	Descrizione Description	Materiale Material	Protezione Preservation	N° Dis. Dwg No.	Codice N° Code No.
9	1	TESTINA STAGNA IP 65 CONNECTION HEAD EEx ia IIC T6	ALLUMINIO ALUMINUM	VERNICIATA PAINTED		BLUE RAL 5015
8	1	TARGHETTA IDENTIFICAZIONE NAMEPLATE	ASTM A 240 TP. 316			
7	1	BASETTA 2 MORSETTI TERMINAL BLOCK	CERAMICA CERAMIC			
6	1	GIUNTO 3 PEZZI ø 1/2" NPT-F/F UNION	ASTM A 105 CARBON STEEL	ZINCATO ZINC PLATED		
5	2	NIPPLO ø 1/2"NPT-M/M NIPPLE	ASTM A 106 Gr.B CARBON STEEL	ZINCATO ZINC PLATED		
4	1	RIDUZIONE ø1/2" NPT-F x 1 1/2" NPT-M REDUCTION	ASTM A 479 TP. 316			
3	1	T/C S. "K" CAL. ANSI MC 96.1 SINGLE THERMOCOUPLE TYPE "K"	CROMEL/ALUMEL	INCONEL 600 (SHEATH)		
2	2	PIASTRINA DI FISSAGGIO CLAMP	INCONEL 600			
1	1	KNIFE EDGE ø14x40 KNIFE EDGE	INCONEL 600			

NAMEPLATE DETAIL

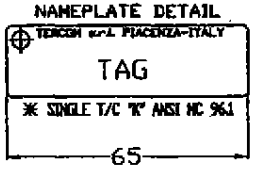

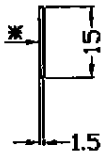

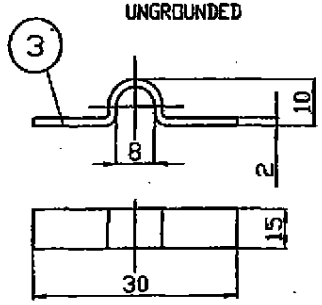

NOTES:
THERMOCOUPLE AND CONNECTION HEAD WILL BE SHIPPED DISASSEMBLED

Rev.	Data Date	Dis. Drafted	Contr. Review.	Appr.	Q.A. Appr.	Commenti Comments
1	11-06 2007	M.L.	[illegible]	[illegible]	[illegible]	MODIFICATE SIGLE MODIFIED TAGS
0	01-06 2007	M.L.	[illegible]	[illegible]	[illegible]	EMISSIONE ISSUE

"KNIFE EDGE" THERMOCOUPLE ASSEMBLY TYPE "K"

ASSIEME TERMOCOPPIA TIPO "K" CON PUNTALE KNIFE EDGE

TERCOM s.r.l. PIACENZA ITALY

N° Pezzi Q.ty 16

Fg. Sh. di of

Commessa N° - Job No. C 348/07

N° Dis. - Dwg No. 34807/5

Copyright 2007 by TERCOM s.r.l. All rights reserved